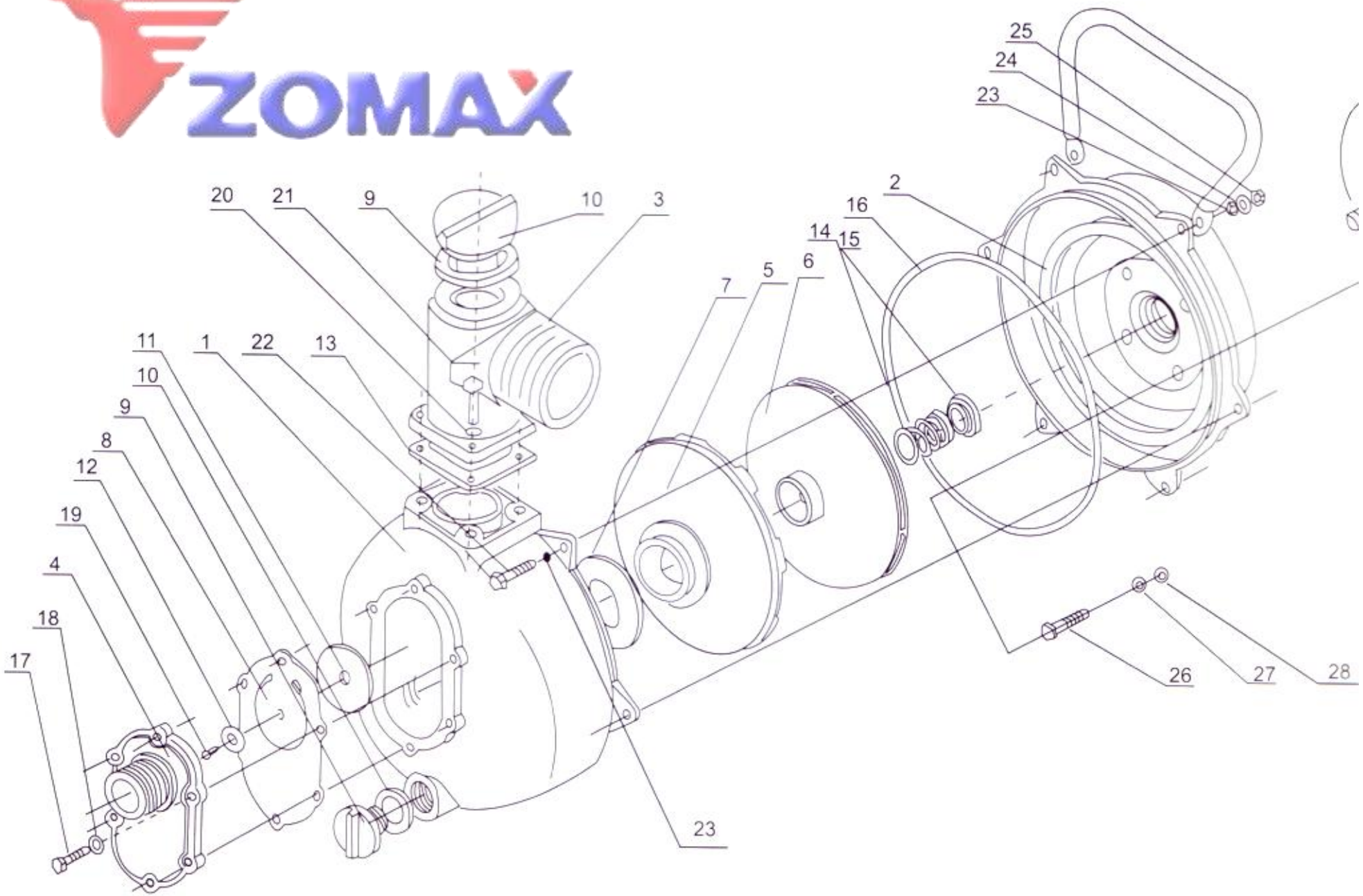

www.blascomotor.com info@blascomotor.com Telf&Fax: 96 661 52 44